Masszeichnung

Elektro-Kochkessel EVO 900 **EK9 / 100L-I-P-A-S**

[Art. 406392119]

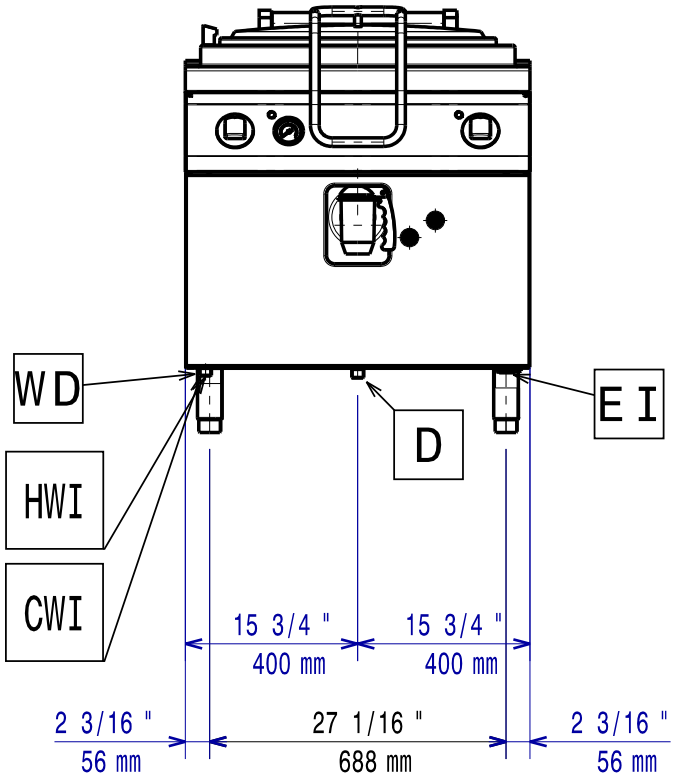

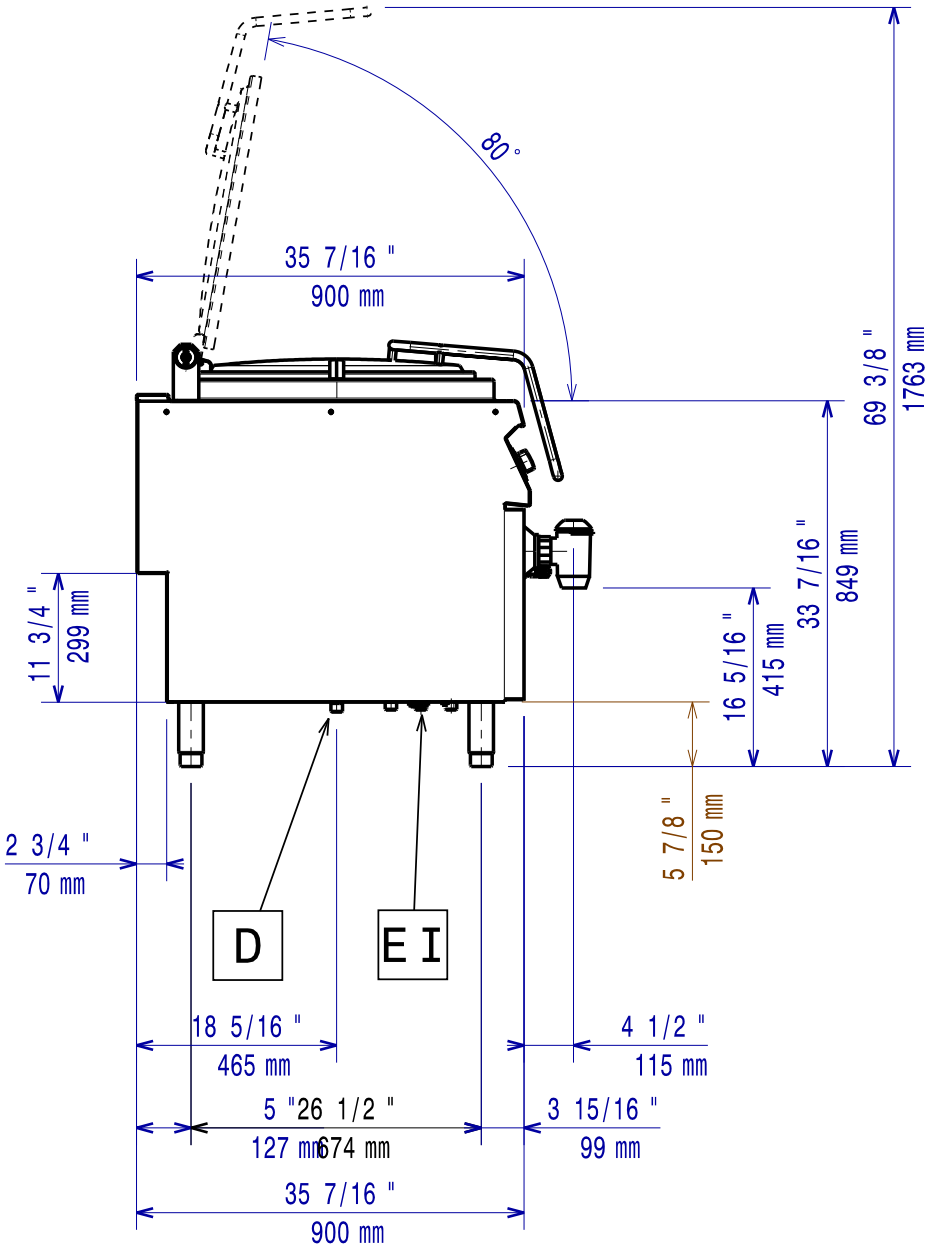

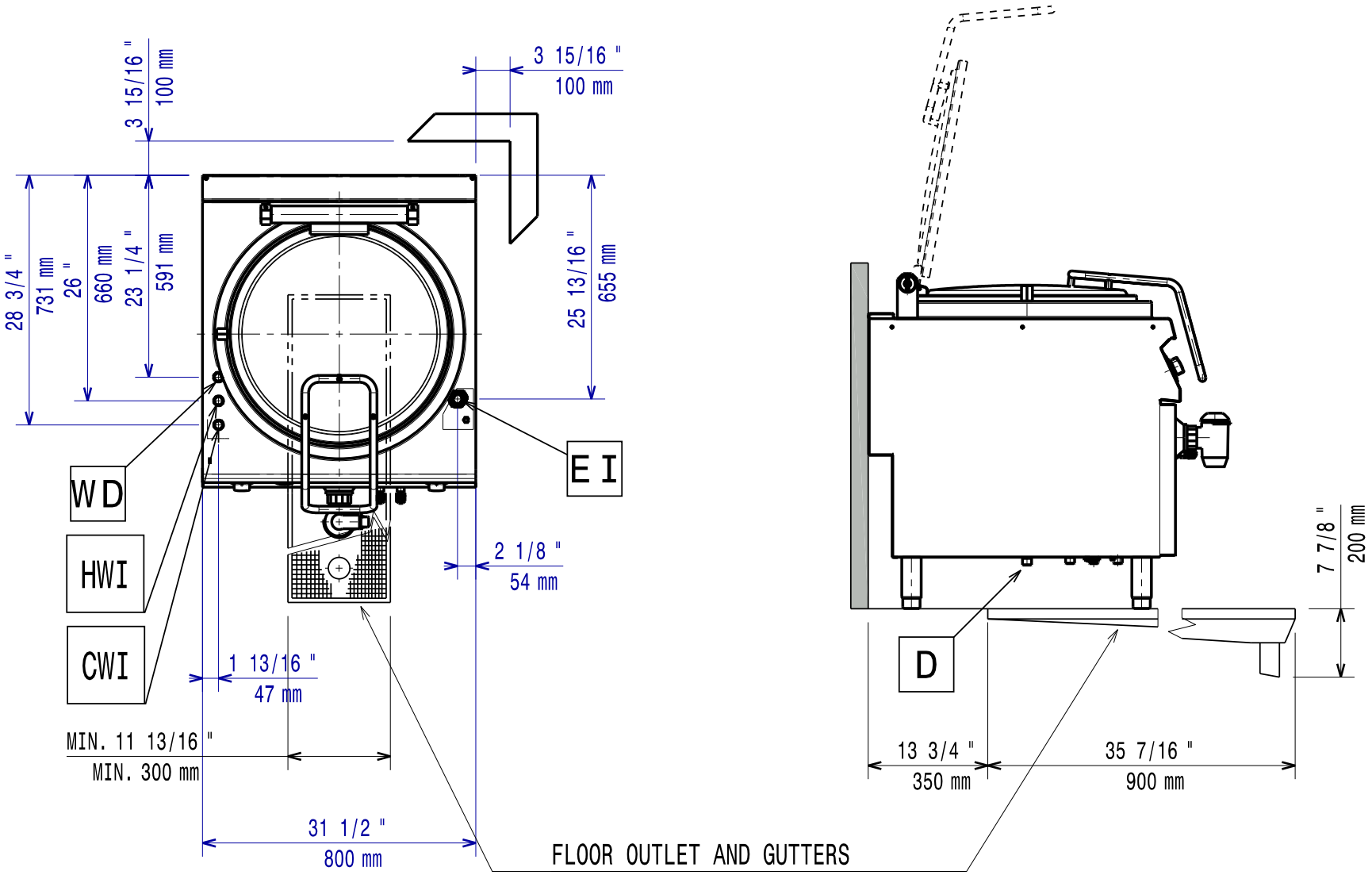
3 15/16 "
100 mm
3 15/16 "
100 mm
28 3/4 "
731 mm
26 "
660 mm
23 1/4 "
591 mm
25 13/16 "
655 mm
WD
HWI
CWI
EI
2 1/8 "
54 mm
1 13/16 "
47 mm
MIN. 11 13/16 "
MIN. 300 mm
31 1/2 "
800 mm
FLOOR OUTLET AND GUTTERS
D
7 7/8 "
200 mm
13 3/4 "
350 mm
35 7/16 "
900 mm