Masszeichnung

Gas-Kippbratpfanne **GK9 / 80L-CNS-HK-S**

[Art. 406392136]

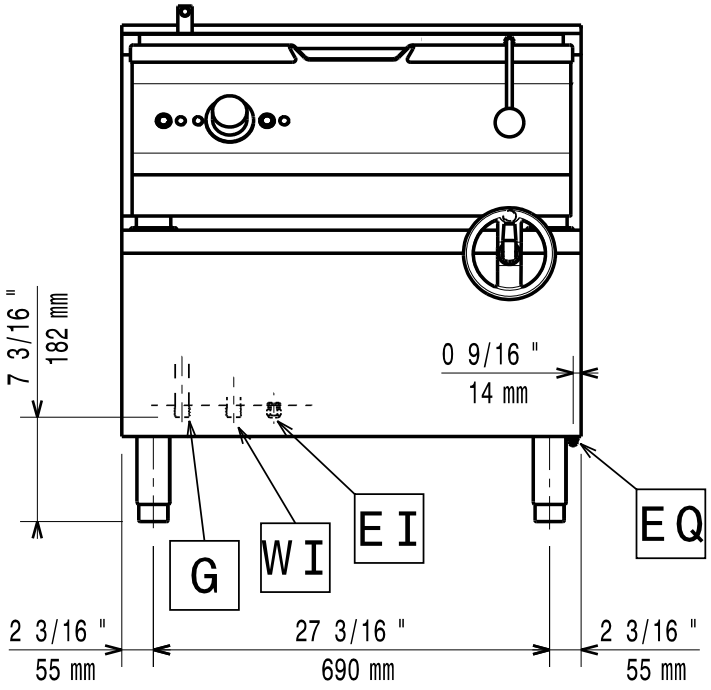

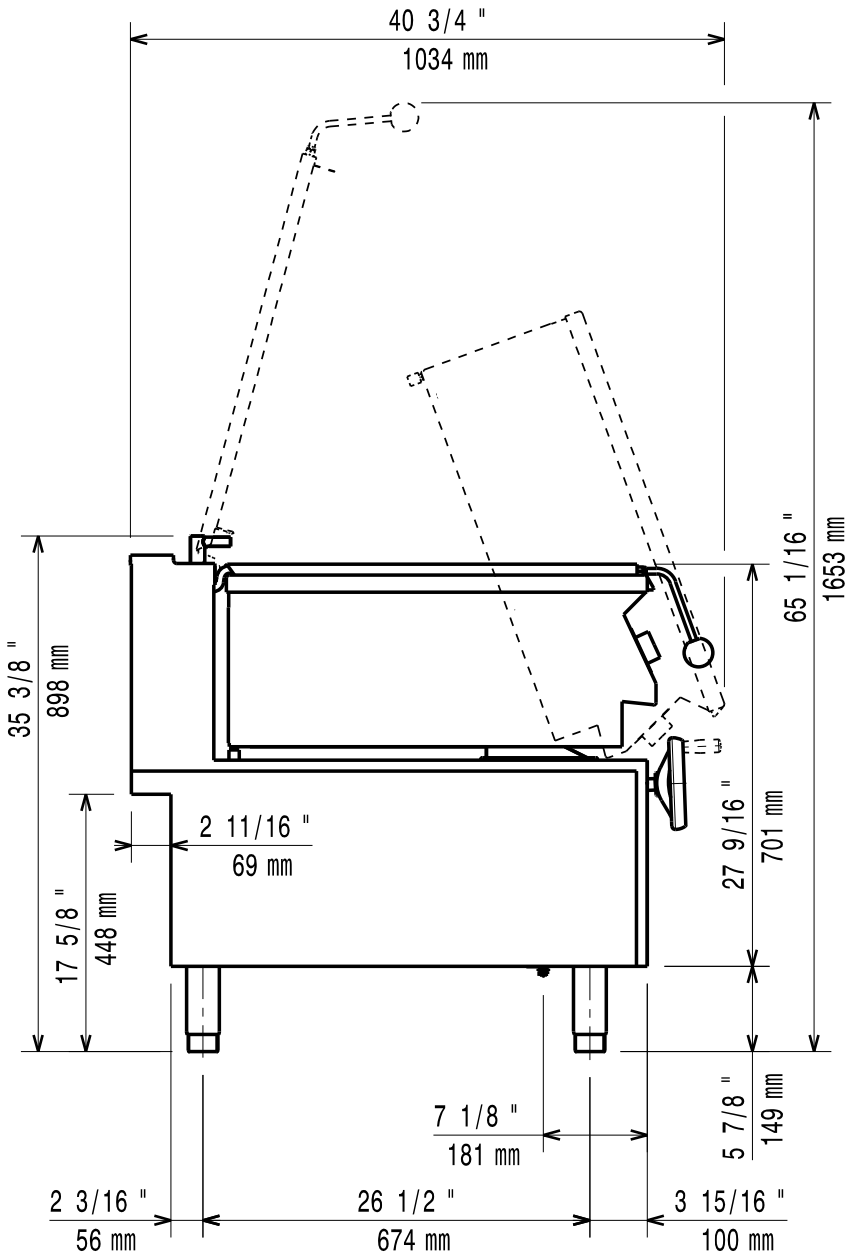

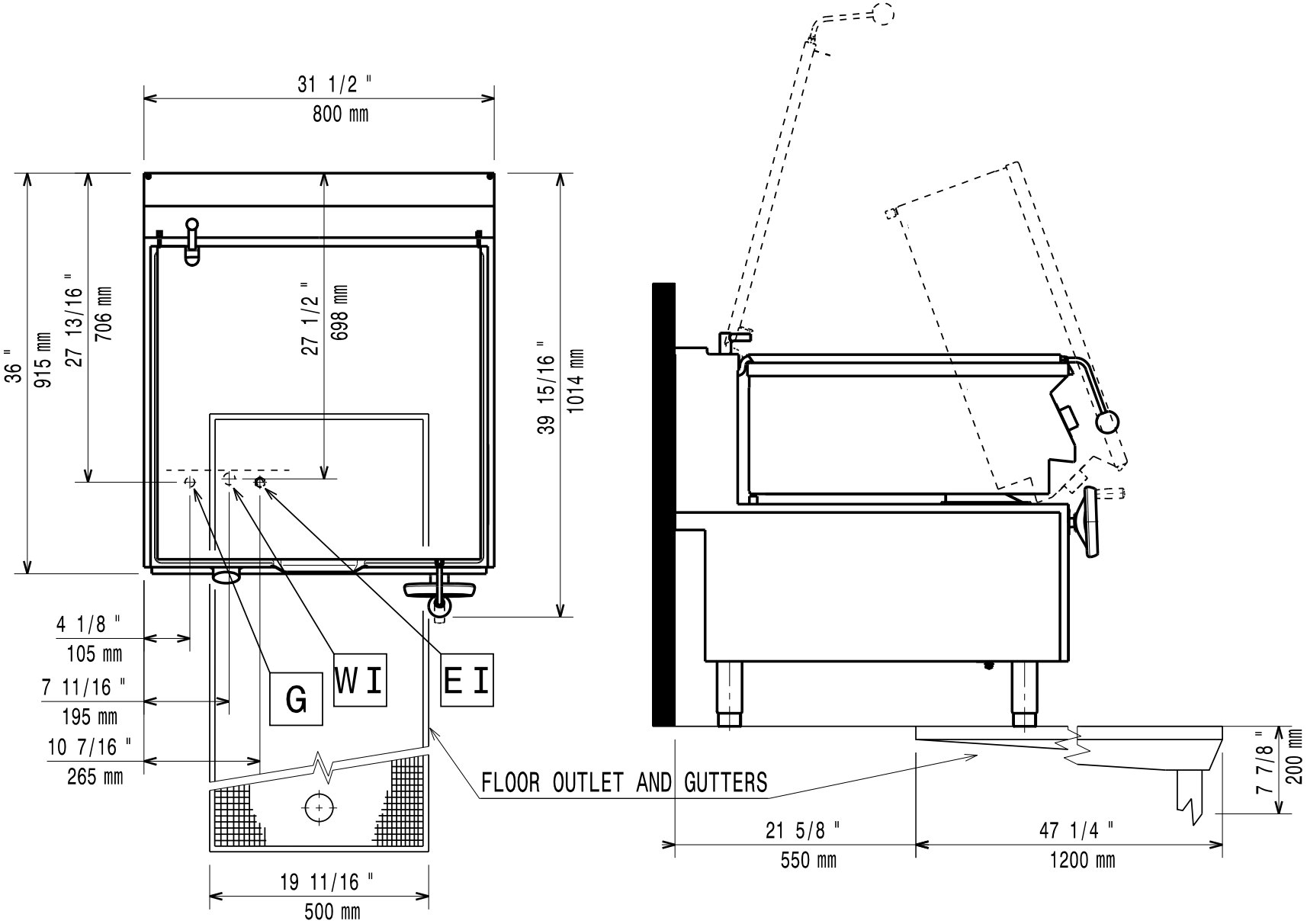
31 1/2 "
800 mm
36 "
915 mm
27 13/16 "
706 mm
27 1/2 "
698 mm
39 15/16 "
1014 mm
4 1/8 "
105 mm
7 11/16 "
195 mm
10 7/16 "
265 mm
G
WI
EI
19 11/16 "
500 mm
FLOOR OUTLET AND GUTTERS
21 5/8 "
550 mm
47 1/4 "
1200 mm
7 7/8 "
200 mm